ICEM'94 (Paris), 5-7 Sept. 1994, Vol.2, pp.437-442.

ENHANCED ACCURACY METHOD FOR MAGNETIC LOSS MEASUREMENT IN SWITCHED RELUCTANCE MOTOR

METHODE A PRECISION AUGMENTEE POUR LA MESURE DES PERTES MAGNETIQUES DANS LES MOTEURS A RELUCTANCE A ALIMENTATION ELECTRONIQUE

HOANG E., MULTON B., GABSI M.
LESiR
Cachan, FRANCE

Abstract

Determination of iron losses in a switched reluctance motor (S.R.M) is complex in both estimation and measurement. This article proves that there is a physical symmetry in the behaviour in motor and generator modes. We propose a test set-up, which permits, thanks to the "back-to-back method", the accurate measurement of losses, especially magnetic losses. We have established that symmetry exists between motor and generator modes in terms of the electromagnetic torque and the values of iron and copper losses. This method allows us to characterise the impact of control parameters on iron losses for the full operating range and especially at full load. In addition, this measurement method provides the possibility to validate the model for estimating iron losses.

The testing set-up bench allows us to face technical and practical problems for bringing measurement methods into operation.

For example, to obtain the desired operating point, the command law must be asymmetrical between motor and generator mode because of the influence of losses. Numerical simulation based on the electromagnetic behaviour of the actuators provided a command law for motor and generator to take into account inevitable asymmetry while maintaing an equality of iron losses (essential condition for the determination of the iron losses with this back-to-back measurement method).

Keywords

- Iron Loss Measurement
- Switched Reluctance Motor
- Back-to-Back Method
- Motor Losses
- Power Check-Up

Nomenclature

index 1 or m	motor mode
index 2 or g	generator mode
P_{em}	electromagnetic power
P_{in}	input power (electrical or mechanical)
P_{out}	output power
p_{ir}	iron losses
p_{cu}	copper losses
p_{conv}	converter losses
p_{mec}	mechanical losses (friction and windage)
C	instantaneous electromagnetic torque
<C>	average torque
W'_{em}	electromagnetic co-energy
Nr	number of rotor teeth
θ	electrical angle
ϕ	flux linkage
ψ	electrical advance angle related to unaligned position
θ_p	electrical magnetisation angle
U_0	DC. voltage supply
I_0	current supply
v_{com}	switch command voltage
i_{t1}, i_{t2}	transistor currents
i_{d1}, i_{d2}	diode currents
i_1, i_2	phase currents
k_i	current probe factor (A/V)

I-Introduction

In the design and study of the operations of a high-frequency actuator, iron losses play an important part in this design and in the control law optimisation. But, in a system with SRM, computing losses is not an easy task due to the fact that induction is not typical. The two spatial flux density components are very distorted, they possess an average value and their frequency is high compared to the classical 50 or 60 Hz used in typical iron loss manufacturing data. In measurement, we can only use indirect methods providing low accuracy.

Several articles treat the two aspects of iron losses in SRM, computation and measurement. But we can question about the accuracy of the results obtained. Indeed in [3] [4] [5] [6] [7], the measurement of iron loss values is the result of subtracting from input power the sum of load power, converter losses, copper losses and mechanical losses (friction and windage).

$$p_{ir} = P_{in} - (P_{out} + p_{conv} + p_{cu} + p_{mec}) \quad (1.)$$

With this method (segregated loss method) considering the nature of power and losses, accuracy may not be sufficient. (see section IV on error analysis)

For electrical machines, the classical "back-to-back measurement method" consists of coupling two identical machines (from a building perspective) to the same shaft but operating in symmetrical mode, one as a motor and one as a generator [9]. We can quote, for example, the methods for DC. machines (Rayleigh, Potier, Hopkinson, Blondel) , DC. series motors (Hutchinson), synchronous and induction machines [10]. This "back-to-back method" is also used in other electricity fields [11] or in other areas of physis like mechanics (for example, gearing characterisation).

Three advantages can be found using the back-to-back method.

1-The power source supply only the losses.
2-The loss measurement is direct (better accuracy).
3-All operating points can be tested without load.

In order to deduce iron losses and additionally in the case of our application, to measure all the other accessible losses (copper, converter, mechanical).

If the symmetry in the behaviour in motor and in generator is ideal, then for one machine, iron losses are expressed by :

$$p_{ir} = \frac{1}{2}(\sum \text{losses} - p_{conv} - p_{cu} - p_{mec}) \quad (2.)$$

To conduct this test, the two actuators must be run in motor or in generator mode, and their losses must be the same. The principle of running

in generator mode is expressed in [1],[2], and some application examples exist [12],[13]. In the case of a voltage-fed S.R.M., the theoretical bases were developed by [2] and provide a control law for a symmetrical operating mode. This symmetrical control law leads to the equality of iron losses and the equality of copper losses. The difference in converter losses is not significant because with this method, all losses are directly measured. To determine iron losses for one machine alone, the expression is :

(see power check-up Fig. 2)

$$P_{ir1} = P_{ir2} = P_{ir}$$

$$P_{mec} = P_{mec1} + P_{mec2}$$

$$P_{ir} = \frac{\Sigma losses - P_{conv1} - P_{conv2} - P_{mec} - P_{cu1} - P_{cu2}}{2} \qquad (3.)$$

But the winding resistance and converter semi-conductor create a voltage drop. This voltage drop is not identical for motor and generator modes. Furthermore the function $\phi(i,\theta)$ is not symmetrical with respect to unaligned position (or to the aligned position). These two causes of asymmetry result in control law modifications (see section III : Measurement method). The relation ship (3) remains valid. The converter-machine scheme is represented in Fig.1.

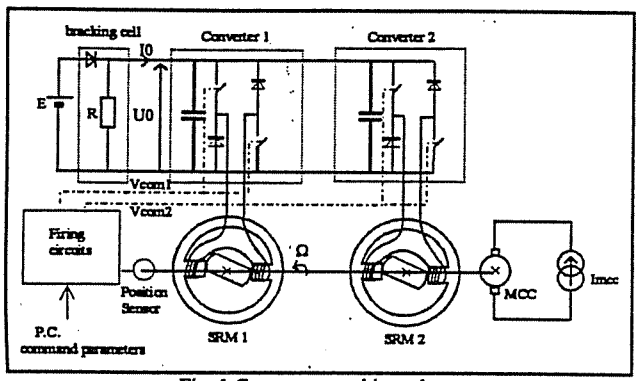

Fig. 1 Converter-machine scheme

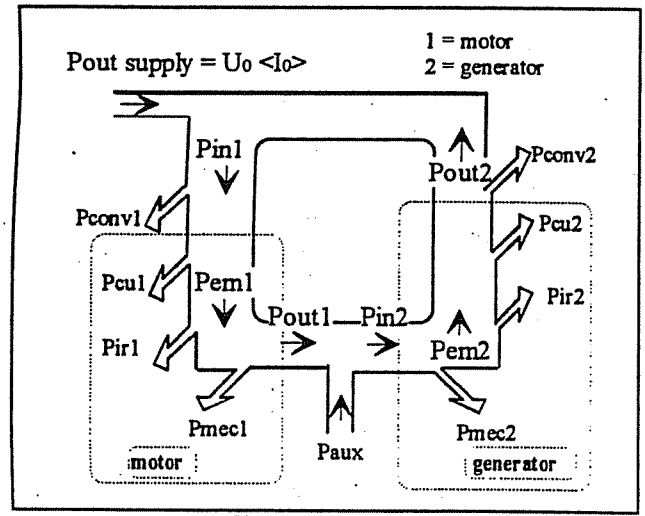

Fig. 2 Power check-up

II-Operational symmetry
Motor mode and generator mode

1 Electromagnetic torque symmetry

concerning SRM, a sizeable body of literature and standard references can be found, torque production has been well explored [1], and for more details on control characteristics see [2]. In an ideal SRM (without loss), the instantaneous torque developed by a phase can be expressed as,the rate of change of the electromagnetic co-energy stored in the phase.

$$C(\theta) = Nr\frac{\partial W'_{em}(\theta,i)}{\partial\theta} \text{ et } W'_{em}(\theta,i) = \int_0^i \phi(\theta,i)\,di \qquad (4.)$$

Where θ is the electrical angle describing the rotor position.
$\theta=0$ for unaligned position.
$\theta=\pi$ for aligned position.

To have a symmetry between the two modes, the average torque in generator mode has to be the opposite of that in motor mode.

$$(<C_g> = -<C_m>) \quad \text{then } C_g(\theta) = -C_m(-\theta) \qquad (5.)$$

$$C(\theta) = Nr\frac{\partial(\frac{1}{2}\int\phi(i,\theta)di)}{\partial\theta} \qquad (6.)$$

$$\phi_g(i,\theta) = \phi_m(i,-\theta) \qquad (7.)$$

In other words, flux linkages in generator mode and in motor mode are symmetic functions, thus electromagnetic states are symmetrical. And this, in spite of the current is always positive.
In the case of voltage-fed (see Fig. 3,4,5), this is verified if :

$$\theta_{pg} = \theta_{pm} = \theta_p \qquad (8.)$$

$$\psi_g = -\psi_m + 2\theta_p \qquad (9.)$$

ψ : electrical advance angle related to unaligned position
θp : electrical magnetisation angle

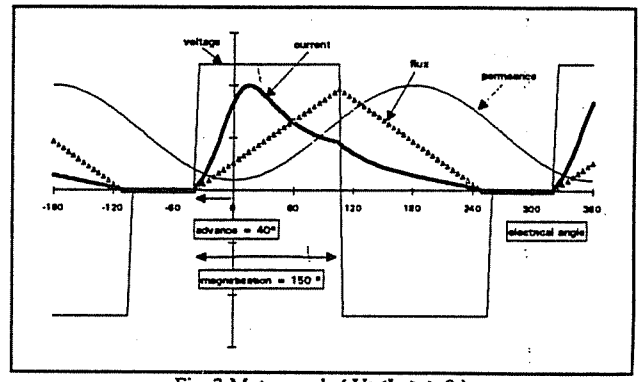

Fig. 3 Motor mode ($U_o<I_{o1}> > 0$)

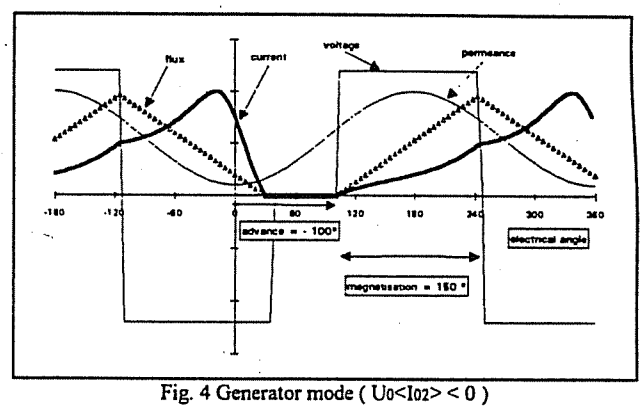

Fig. 4 Generator mode ($U_o<I_{o2}> < 0$)

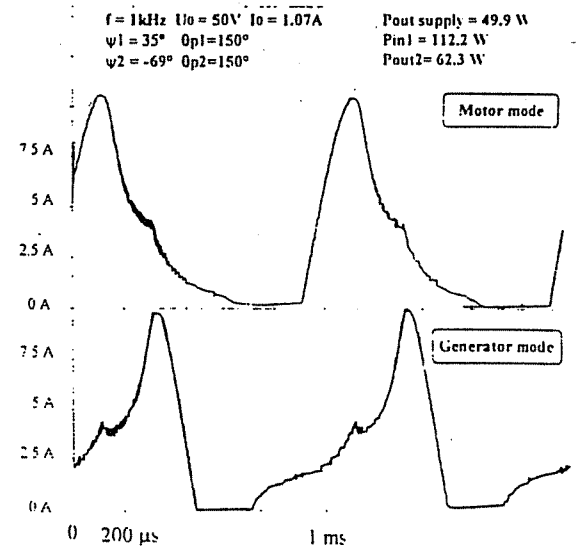

Fig. 5 Example of phase current

2 Loss symmetry

Switched reluctance motor mode with full-wave voltage is also studied. At higher speeds, many authors have shown that this supply mode is very attractive.

a) Copper losses

In section II-1 (Electromagnetic torque symmetry), we have shown that current in motor mode and in generator mode are symmetrical functions related to unaligned position (minimum permeance). Their RMS. values are identical, and their associated copper losses are equal.

Copper losses can be computed by considering the RMS. current and the resistance values (at usage temperature). But the increase of resistance value due to the winding temperature is uncertain. An "Epstein" method (with secondary auxiliary winding) permits eliminating this uncertainly.

b) Iron losses

Symmetry value of losses can be explained by simulation. The used loss model takes into account variation of flux density, and we adopt the following formulation :

$$p_{ir(W/m^3)} = p_h + p_{ec} \qquad (10.)$$

$$p_h = w_h f \text{ et } w_h = k_{h1}\Delta B_{pp} + k_{h2}\Delta B_{pp}^2 \qquad (11.)$$

Where ph represents the hysteresis loss component and pec the eddy current loss component.

However, when the induction waveform contains minor loops, an empirical correction must be applied [14] :

$$w_h = (k_{h1}\Delta Bpp + k_{h2}\Delta Bpp^2)\left(1+\frac{0.32}{\Delta B_{pp}}\sum_{i=1}^{n}\Delta B_i\right) \qquad (12.)$$

$$p_{ec} = \frac{1}{T}\int_0^T \alpha_p\left(\frac{dB}{dt}\right)^2 dt \quad \text{and} \quad \alpha_p \approx 1.3\left(\frac{ep^2}{12\rho}\right) \qquad (13.)$$

ΔB_{pp} : total variation of flux density.

ΔB_i : variation of flux density for minor cycle

The coefficient of 1.3 is empirical and is determined after testing.

ep : steel thickness (mm) ; ρ : resistivity (Ω.m)

Identified characteristics of two types of Fe_Si steel.

ep= 0.35mm ; 2.8W/kg (1.5T,50Hz)
$k_{h1} = 0$; $k_{h2} = 40$; $\alpha_p = 0.025$

ep = 0.5mm ; 6.5W/kg (1.5T,50Hz)
$k_{h1} = 12$; $k_{h2} = 90$; $\alpha_p = 0.065$

Comment on parameter identification

Mechanical constraints (building treatments) modify magnetic steel data. A parameter identification (k_{h1} ; k_{h2} ; α_p) of the machine is better than classical testing ("Epstein" method or S.S.T.) on samples.

Examples of iron loss formulation

B(t) = sinusoidal induction. $B(t) \in [-Bm;+Bm]$

$$P_{ir} = \left[kh_1(2B_m) + kh_2(2B_m)^2\right]f + 2\pi^2\alpha_p B_m^2 f^2 \qquad (14.)$$

B(t) = unipolar triangular induction. $B(t) \in [0;+Bm]$

$$P_{ir} = \left[kh_1(B_m) + kh_2(B_m)^2\right]f + 4\alpha_p B_m^2 f^2 \qquad (15.)$$

When induction is rotational, loss pre-determination is difficult because no rigorous physical model has been developed. Therefore, loss value is usually computed from the loss deduced separately for each of the two orthogonal alternating flux density components [15].

$$p_{ir} = p_{ir}(x) + p_{ir}(y) \qquad (16.)$$

With symmetry of command strategy, the variation of flux density is made at symmetrical angles about the unaligned position ; total variation of induction and its derivative are similar for the motor and the generator.

We conclude that iron losses are identical in motor and generator with voltage-fed under particular command conditions. It means that with the same absolute value of supplied electromagnetic power. iron losses are identical.

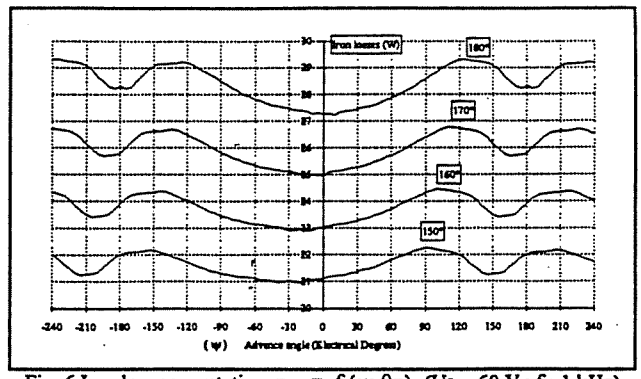

Fig. 6 Iron loss computation $p_{ir} = f(\psi,\theta p)$ ($U_0 = 60$ V ; f = 1 kHz)

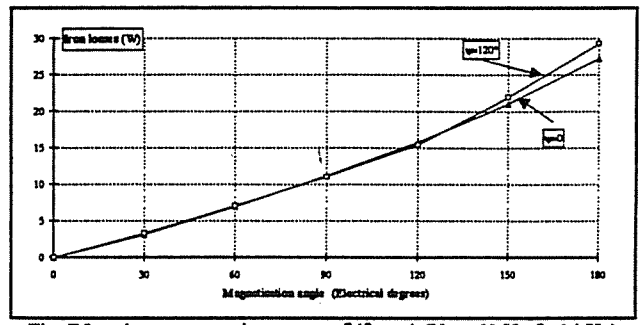

Fig. 7 Iron loss computation. $p_{ir} = f(\theta p, \psi)$ ($U_0 = 60$ V ; f = 1 kHz)

In Fig. 6, iron losses are represented as a function of advance angle. Voltage supply is fixed, and the curves are plotted for different values of θ_p (magnetisation angle).

These curves are symmetrical related to the advance angle $\psi_{sym} = \theta_p - 180°$.

In Fig. 7, iron losses are represented in function of magnetisation angle. Voltage supply is fixed and the curves are plot for two values of ψ ($\psi = 0°$ and $\psi = 120°$).

c) Converter losses

Energy runs through the static converter, so there are losses in the semi-conductor which can be separated into conduction losses and switching losses. Determination of these quantities is quite simple, and in the case of full wave voltage-fed the switching losses in the converter are weak comparated to the conduction losses.

But even if the motor and the generator currents have the same average and RMS. values, the losses in the two converters are different. Indeed, the switched current in motor mode is equal to the diode current in generator mode and their voltage drops are different.

Conduction losses can be computed by considering the current in the switches and the drop voltage when they are switched on (See Fig. 11).

III-Measurement method

In the case of voltage feeding, the power control parameters are the supply voltage, the advance angle (ψ) and the magnetisation angle (θ_p).

(See section II, Fig. 3 & 4)

1 Ideal case

Losses are negligible in comparison with the electromagnetic power (P_{em}))losses), and the two modes, motor and generator, are symmetrical.

So we obtain (10) : $P_{emg} = -P_{emm}$ with $\psi_g = -\psi_m + 2\theta_p$

The power supply is ($U_0 < I_0 >$) equal to the sum of losses (Eq. (3)).

2 Real case

Some asymmetry modifies the ideal rate presented above. This asymmetry is in the voltage drop, both in the converter and in the winding, and in the magnetic function $\phi(i,\theta)$.

In an S.R.M. the magnetic characteristic is symmetrical with respect to the unaligned position (and related to the aligned position, too). In fact, we can explain this phenomenon with the asymmetry of the relation ship B(H) in the core. This relation ship is not the same during the magnetisation phase or during the demagnetisation phase. We can see this effect on the induced voltage (rotating voltage) measured with constant current and at constant speed. The waveform of the negative alternation has a greater maximum and a smaller duration angle than the positive alternation (see Fig. 8).

The function $\phi(\theta)\big|_{i=cte}$ is not symmetrical. $\phi(\theta)\big|_{i=cte} \neq \phi(2\pi-\theta)\big|_{i=cte}$. So, the use of the relation ship (10) cannot allows us to have : $|P_{em1}| = |P_{em2}|$.

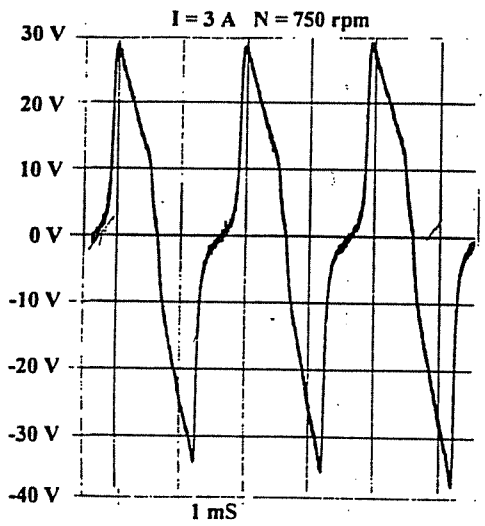

Fig. 8 Induced voltage

We are going to see how to compensate for asymmetry without forgetting the finality of these tests is to determine iron losses. Remember, there is the possibility to measure the other accessible losses with the assumption that those losses we can't measure are negligible (for example, stray mechanical losses) The command law modifications of the Eq. (10) ($\psi_G = -\psi_M + 2\theta_p$) must keep in equality the iron losses for the two machines. Eq. (3) provides an equation for computing iron losses for each machine.

With power check-up (see Fig. 2), Eq. (30) shows that a symmetry of P_{em} results in a decrease of the angular velocity due to the presence of losses. Different solutions are presented.

Motor mode

$$P_{in1} = U_0 \langle I_{01} \rangle \quad (17.)$$

$$P_{in1} = p_{conv1} + p_{cu1} + P_{em1} \quad (18.)$$

$$P_{em1} = p_{ir1} + p_{mec1} + P_{out1} \quad (19.)$$

Generator mode

$$P_{in2} = p_{mec2} + P_{em2} \quad (20.)$$

$$P_{em2} = p_{ir2} + p_{cu2} + p_{conv2} + P_{out2} \quad (21.)$$

$$P_{out} = U_0 \langle I_{02} \rangle \quad (22.)$$

Mechanical equation

$$C_{mot} + \frac{p_{aux}}{\Omega} - C_{load} = J\frac{d\Omega}{dt} \quad (23.)$$

$$P_{out1} = C_{mot}\,\Omega \quad (24.)$$

$$P_{in2} = C_{load}\,\Omega \quad (25.)$$

The supply power of the DC. motor (p_{aux}) which require, for one case to the next, to provide mechanical losses or to be the load torque. Finally :

1) Power supply with a stable system $\left(\frac{d\Omega}{dt} = 0\right)$.

From Eq. (24),(25),(26)

$$P_{out1} + p_{aux} - P_{in2} = J\frac{d\Omega}{dt}\Omega \quad (26.)$$

From Eq. (19),(20),(21),(22),(26)

$$P_{in1} - P_{out2} + p_{aux} - \sum \text{losses} = J\frac{d\Omega}{dt}\Omega \quad (27.)$$

$$\Omega = \text{cte if} \frac{d\Omega}{dt} = 0$$

$$P_{\text{out supply}} = P_{in1} - P_{out2} = \sum \text{losses} - p_{aux} \quad (28.)$$

With Eq.(28), a power check-up shows that the power supply by the D.C source is equal to the sum of losses.

2) Equality of P_{em} ($P_{em1} = P_{em2}$) *and Stability of the system.*

From Eq. (21),(22),(25),(26),(27)

$$P_{em1} - p_{ir1} - p_{mec1} + p_{aux} - P_{em2} - p_{mec2} = J\frac{d\Omega}{dt}\Omega \quad (29.)$$

if $P_{em1} = P_{em2}$

$$J\frac{d\Omega}{dt}\Omega = -p_{ir1} - p_{mec1} - p_{mec2} + p_{aux} \quad (30.)$$

With Eq. (30), An equality of P_{em} results in a speed decrease of the system.

Comment on mechanical losses

Before testing, it is necessary to determine mechanical losses as a function of angular velocity. But, accuracy of these measure depends on the type of measurement equipment. With the objective of nullifying these source of error, a compensation serves as a substitute for a measure. This compensation is realised with a DC. motor running at operating speed. During testing, the input power and the angular velocity of the DC. motor must remain constant. In this case, mechanical losses remain constant, too.

Finally : $p_{aux} = p_{mec1} + p_{mec2}$ (31.)

To compensate for the speed decrease of the system due the presence of losses (see Eq.(30)) a command law modification is necessary. These modifications increase $P_{em1} - P_{em2}$. If two parameters are variable (ψ, θ_p), only one (ψ) can be modified, because iron losses are a function of $\theta_p^{1.2}$ and virtually constant with advance angle.

(See section II-2-b Iron losses. $p_{ir} \propto \theta p^{1.2}$ and $p_{ir} \approx cte\ \forall\ \psi$).

Impact of asymmetry source on iron loss value

Remember that asymmetry has three origins. The first is due to the modification of command law (see Eq.(10)) to maintain a stable operating point. The second is due to a voltage drop in the converter and in the winding. The third is due to a functional aymmetry $\phi(\theta)\big|_{i=cte}$ (or $i(\phi,\theta)$).

A scheme is presented in Fig.9 to synthesise the idea.

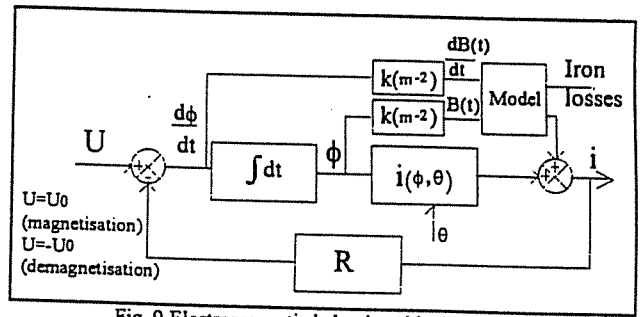

Fig. 9 Electromagnetic behaviour block-diagram

The resistance R (to symbolise all voltage drops) and function $i(\phi,\theta)$ modify dB/dt. B(t) and iron losses.

To estimate the influence on iron losses of the three asymmetry sources, a simulation software permits computing, for different command

parameters and taking into account voltage-drops and $i(\phi,\theta)$, the iron loss value.

In the most unfavourable case, a difference of 10% between iron losses on motor mode and iron losses on generator mode has been computed.

We can conclude that to compensate for asymmetry sources, a modification of Eq. (10) maintaining θ_p constant and ψvariable allows keeping iron losses similar.

The power rating of the two machines is 100 W, and the rated voltage is 100 V. Considering rated voltage, voltage drop is relatively significant. For machines with greater rated power, asymmetry will be lower.

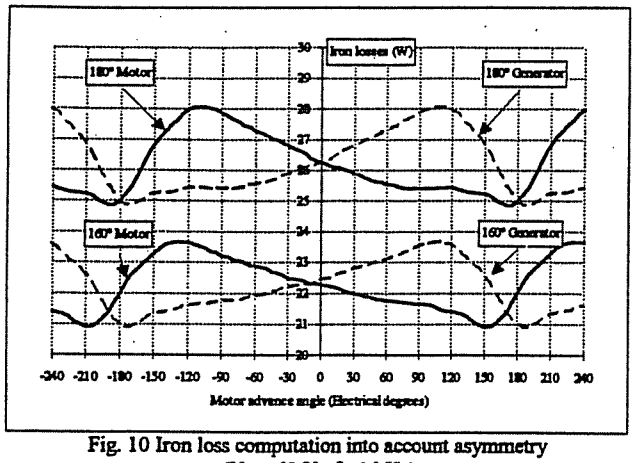

Fig. 10 Iron loss computation into account asymmetry
($U_0 = 60$ V ; f=1 kHz)

In Fig. 10, iron losses are plotted for motor and generator versus ψ_m (motor advance angle) and with : $\psi_g = -\psi_m + 2\theta_p$.

Other solution to compensate for speed decrease

In the case where an accurate mechanical measurement system is present, the auxiliary motor can compensate asymmetry sources (with p_{aux} term). In this case, command law is given by Eq.(10). Mechanical losses must be accurate and mechanical power supply is added to DC. power supply $(U_0\langle I_0\rangle)$.

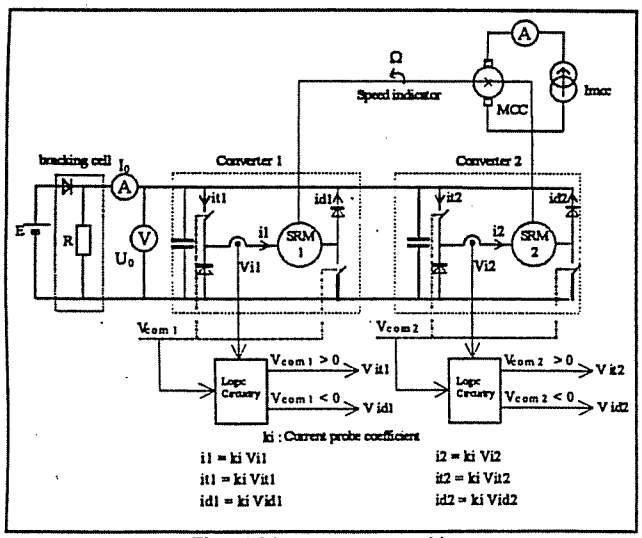

Fig. 11 Measurement assembly

IV-Error analysis

1 Measurement errors

For each measurement, there is a relative error $\left(\frac{\Delta p}{p}\right)$.

This relative error has two origins, which are the measurement method (for systematic error) and the measuring devices (for measurement error).

For example, a systematic error is due to the converter loss model or the copper loss model.

2 Segregated method

$$P_{in} = p_{conv} + p_{cu} + p_{ir} + p_{mec} + P_{out} \quad (32.)$$

$$\frac{\Delta p_{ir}}{p_{ir}} = \frac{\frac{\Delta P_{in}}{P_{in}} P_{in} + \frac{\Delta p_{conv}}{p_{conv}} p_{conv} + \frac{\Delta p_{cu}}{p_{cu}} p_{cu} + \frac{\Delta p_{mec}}{p_{mec}} p_{mec} + \frac{\Delta P_{out}}{P_{out}} P_{out}}{P_{in} - P_{out} - p_{conv} - p_{cu} - p_{mec}} \quad (33.)$$

3 Back-to-back method

$$U_0\langle I_0\rangle = p_{conv1} + p_{cu1} + 2p_{ir} + p_{conv2} + p_{cu2} \quad (34.)$$

$$\frac{\Delta p_{ir}}{p_{ir}} = \frac{\frac{\Delta P_{in}}{P_{in}} P_{in} + \frac{\Delta p_{conv}}{p_{conv}} \Sigma p_{conv} + \frac{\Delta p_{cu}}{p_{cu}} \Sigma p_{cu}}{P_{in} - \Sigma p_{conv} - \Sigma p_{cu}} \quad (35.)$$

4 Numerical application

$$\frac{\Delta P_{in}}{P_{in}} = 1\%; \frac{\Delta Pout}{P_{out}} = 2\%; \frac{\Delta pmec}{pmec} = 5\% \frac{\Delta p_{conv}}{p_{conv}} = 2\%; \frac{\Delta p_j}{p_j} = 2\%$$

a) Example 1

$\psi_1 = 35°$ $\theta_{p1} = 150°$ $\psi_2 = -69°$ $\theta_{p2} = 150°$

$U_0 = 50$V f = 1kHz

$U_0 < I_0 > = 49.9$ W

$P_{in1} = 112.2$ W ; $P_{out1} = 75.2$ W

$P_{in2} = 97.1$ W ; $P_{out2} = 62.3$ W

$p_{conv1} = 3.4$ W ; $p_{cu1} = 10.7$ W

$p_{conv2} = 4.4$ W ; $p_{cu2} = 7.4$ W

$p_{aux} = 21.9$ W ; $p_{mec} = 14$ W

Segregated method	$p_{ir} = 15.9 \pm 3.2$ W (20 %)
Back-to-back method	$p_{ir} = 15.9 \pm 1.0$ W (6 %)

b) Example 2

$\psi_1 = 40°$ $\theta_{p1} = 180°$ $\psi_2 = -20°$ $\theta_{p2} = 180°$

$U_0 = 50$V f = 1kHz

$U_0 < I_0 > = 69.4$ W

$P_{in1} = 122.6$ W ; $P_{out1} = 75.3$ W

$P_{in2} = 99.5$ W ; $P_{out2} = 53.2$ W

$p_{conv1} = 4.4$ W ; $p_{cu1} = 13.0$ W

$p_{conv2} = 5.6$ W ; $p_{cu2} = 10.4$ W

$p_{aux} = 24.2$ W ; $p_{mec} = 14$ W

Segregated method	$p_{ir} = 22.9 \pm 3.4$ W (15 %)
Back-to-back method	$p_{ir} = 22.9 \pm 1.4$ W (6 %)

V-Conclusion

Measurement of losses on a converter-SRM system is not easy if we are seeking a high level of accuracy. The determination of input power is difficult and requires a sophisticated wattmeter (wide bandwidth, low electromagnetic susceptibility) because of distorted current and voltage waveforms. Concerning output power, a high-accuracy torque-meter is usually necessary.

To reduce error in the measurement, one solution is to determine input power before the converter by measuring DC voltage U0 and average current I0 (see Figure 2). But in this case, it is necessary to quantify converter losses.

Symmetry between motor and generator mode, as well as iron losses, has been established and allows the use of the back-to-back method in measuring SRM losses with more accuracy because all measurement quantities are in electrical terms and their number is minimal.

The study of the impact of control parameters is conducted in better conditions in the case of the voltage supply mode, and this method allows us to complete a study about mathematical models for predicting iron losses.

Moreover, this method is attractive for high power SRM-drive systems because it permits measuring efficiency without a high power supply and load.

VI-Annexe

1 Actuator data

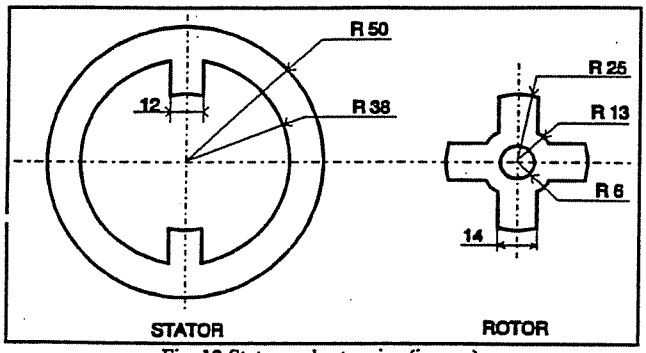

Fig. 12 Stator and rotor size (in mm)

Active lenght = 20 mm
Air gap lenght = 0.2 mm
number of turn = 100
Steel Fe_Si 3% 0.5 mm

2 Mechanical losses

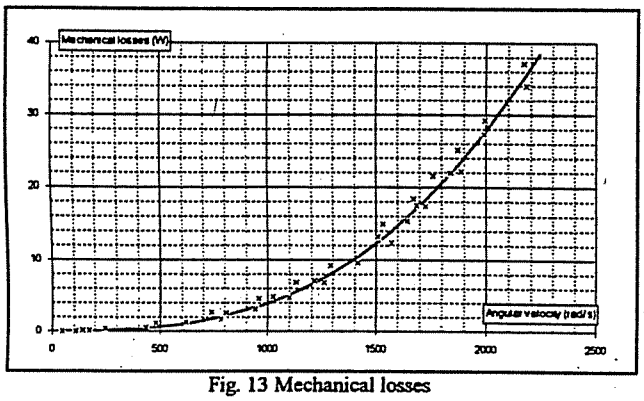

Fig. 13 Mechanical losses

$f = Nr\,F$ f:electric frequency F = mechanical frequency

$F = \frac{N}{60}$ N(rpm)

Ex: N= 15 000 rpm f = 1 kHz Ω = 1570 rad/s

VII-References

[1] P.J. Lawrenson, J.M. Stephenson, P.T. Blenkinsop, J. Corda and N.N. Fulton.
Variable-Speed Switched Reluctance Motors
Proceedings IEE, vol. 127, Pt. B, no 4, pp 253-265, July 1980.

[2] B. Multon, C.Glaize
Optimisation du Dimensionnement des Alimentations des Machines à Reluctance Variable. Revue Phys. Appl. ,n° 22, pp 339-357,Mai 1987.

[3] C. Cavallaro, S. Musumeci, A. Raciti, A. Testa
Determination of Switched Reluctance Motor losses.
Speedam, Positano (Italy), pp 403-408, May 19-21 1992.

[4] P. Materu, R. Krishnan.
Estimation of Switched Reluctance Motor losses.
IEEE-IAS Proceedings, Pittsburgh, PA, pp 176-187, October 1988.

[5] H.M. Metwally, J. Faiz, J.W. Finch
Core loss in Switched Reluctance Motor structures : experimental results. ICEM, Vol 2, pp 32-35, 1988.

[6] J. Boivie.
Iron Loss Model and Measurements of the Losses in a Switched Reluctance Motor.
Conf. publ. n°. 376 IEE - EMD, pp 219-222, 8-10 Sept 1993.

[7] J.L. Andriamifidy, R. Vives Fos, C. Ramiarinjaona, J. F. Rialland
Predetermination of the Electromagnetic Losses in High Speed Electrical Machines: Application to Switched Reluctance Motor.
Conference publication No. 376 IEE - EMD, pp 223-228, 8-10 Sept. 1993.

[8] E. Hoang.
Méthode d'opposition Appliquée à un ensemble Convertisseur Statique - Machine à Réluctance Variable à Double Saillance
Congrès FIRELEC, Grenble (France), 6-8 Avril 1994.

[9] E. Pierré.
Essais des Machines Tournantes
Techniques de l'ingénieur, Traité Génie Electrique, , pp D3750 6-9.

[10] M. Bressani, A. Odorico, M. Sica.
High-Speed, Large-Power Induction Motors for Direct Coupling to Variable-Speed Gas Compressors.
EPE' Brighton, pp 366-371, sept 93.

[11] J. Gonzalez.
Contribution à L'introduction de la Commutation Douce dans les Onduleurs à Modulation de Largeur d'Impulsion
Thèse de doctorat, Paris 6, décembre 1991

[12] David A. Torrey
Variable-Reluctance Generators in Wind-Energy System
PESC' 93 Seatle june 93 pp 561,567

[13]Caio A. Ferreira, Stephen R. Jones, W. S. Heglund, W.D. Jones
Detailed Design of 30 kW Switched Reluctance Starter/Generator System for a gas Turbine Engine Application.
IEEE IAS Toronto, pp 97-105, 1993.

[14] J.D. Lavers, P.P. Biringer, H. Hollitscher
A Simple Method of Estimating the Minor Loop Hysteresis Loss in Thin Laminations.
IEEE Trans. Magn., vol 14, pp 386-388, 1978.

[15] T. Yamaguchi, K. Narita.
Rotational Power Losses in Commercial Silicon-Iron Laminations.
Elec. Eng. in Japan, vol 96, no. 4, pp 15-20, 1976.